Journal of Ecology and Environmental Sciences
ISSN: 0976-9900 & E-ISSN: 0976-9919, Volume 3, Issue 1, 2012, pp.-54-62.
Available online at http://www.bioinfo.in/contents.php?id=41

AGRO-ENVIRONMENTAL SYSTEMS AND AGENT-BASED SIMULATION: SPECIFIC IMPLICATIONS AND AN INTEGRATED BASELINE

BIJAN ABADI[1*], VERONIKA GAUBE[2] AND MANSOUR SHAHVALI[3]

[1]Department of Agricultural Extension and Education, Shiraz University, 71441-23311, Shiraz, Iran.
[2]Institute of Social Ecology, IFF, Klagenfurt University, Schottenfeldgasse 29, A-1070 Vienna, Austria.
[3]Department of Agricultural Extension and Education, Shiraz University, 71441-23311, Shiraz, Iran.
*Corresponding Author: Email- abadi.bijan@gmail.com

Received: February 17, 2012; Accepted: March 15, 2012

Abstract- This contribution intends to draw an integrated baseline to use multi-agent simulation in agro-environmental systems. There are some specific and discursive implications that they oblige agricultural researchers to use simulation technique as more accurate and confident procedure rather previous conventional analytical ones. Multi-agent simulation enables researchers to simulate interactions between objects and their environment in terms of micro-level behavior and macro-level patterns. As environmental crisis emanates from local activities of farming systems on environment, in order to apply agent-based simulation in agro-environmental systems, an integrated baseline is presented. This baseline pays attention to three important issues 1) different agro-environmental hierarchical levels 2) different domains (e.g. social, economic, ecological and so on) and 3) different times. This contribution can be an appropriate basis for agricultural researchers who are interested in investigating the interactions of farmers and their environments in agro-environmental systems. .
Keywords- Agro-environmental Systems, Agent-based Simulation, Integrative Baseline

Citation: Bijan Abadi, Veronika Gaube and Mansour Shahvali (2012) Agro-Environmental Systems and Agent-Based Simulation: Specific Implications and an Integrated Baseline. Journal of Ecology and Environmental Sciences, ISSN: 0976-9900 & E-ISSN: 0976-9919, Volume 3, Issue 1, pp.-54-62.

Introduction

Variability, connectedness and complexity [67] are the most egregious properties of material system. Agricultural systems are not exception. They are treated as dynamic and complex entities [45, 62, 10, 51, 92]. In fact, vicissitudes within them might arise from both agro-ecosystem's self-regulation forces and intended or not intended by human's actions, which lead to changes in natural environment. Aside from these changes, demographical, cultural, socio-economic and technological changes [23, 33, 12, 38] have been happening. In agricultural systems, these changes comprise substantial changes in food and fiber production, actor spaces, policy frameworks, food regimes, ideologies, and impacts on the environment [93]. The prime questions posed in human ecology, as field that focuses on interactions between human society and environment [7, 94, 43, 48], concentrate on how humans form and are formed by their environment. Assumed humans as a part of the environment by environmental sociologists, the environment and society can only be fully understood in relation to each other [47]. When speaking environment, it encompasses natural, social, economic, cultural and historic components [38, 56]). Certainly, there are close inter-relationships between human and their environment. Material, energy and information are continuously flowing from ecosystem to social system [48] and are being regulated by social system [86]. Theoretically, for social ecologists, the conceptualized model of interactions between nature and society is the basis of empirical and practical research. Regarding this, having developed a framework to conceptualize nature-society interactions by Fischer-Kowalski and Weisz (1999), they assumed a sphere surrounding the social and natural systems that comprises elements of both precincts. Their approach called socio-metabolic, assumes society as appropriate unit of analysis, interpreted as a socio-metabolic system [22]. This framework comprises two key concepts: the socio-economic metabolism and the colonization of natural processes. The former pertains to the flow of energy and material between the society and nature. The latter describes intended and sustained alterations of natural processes through the kinds of human interventions [24]. Moreover, the level of intent, regulation and control are determinants for differentiating

human from nature [50]. Regarding above-mentioned concerns, agriculture is one of the prominent examples of interventions where societies change and impact ecosystems; therefore, corresponding with Fischer-Kowalski and Weisz's model. The impact of agricultural activities on environment [52, 55] signals modification in environmental situations. These interventions can encompass planting, application of agrochemicals, consolidation of farmland, changes of water regimes, breeding, or genetic engineering [13, 24]. Therefore, for human ecologists it would be important to study the interactions between human and their environment. This contribution intends to draw an integrated baseline in order to investigate interactions among farmers and their environments using agent-based simulation. This baseline would take into specific considerations such as different hierarchical levels, different domains and time. First of all, we would like to explain why and wherefore researches can use simulation to explore interactions between humans and their environment. After accounting for integrated baseline, some empirical researches that have used (or related to) agent-base modeling (ABM) in different contexts will be concentrated.

The modeling and simulation of social systems

Logic for modeling and simulation

Models are characterized as simplifications [84, 30] and estimations of the real world [80, 11]. Having divided models into exploratory and predictive, the former strives to understand on some aspect of the system and explore theory, instead, the latter, by emulating real-world systems, is used to test policies, do forecasting, extrapolate trends and create scenarios with *what if* [19, 60]. Modeling approaches examining the sequels of possible future scenarios may render an opportunity to keep track certain changes hereinbefore they have occurred [33]. In general, modeling is a feasible procedure to find out the complexities and particulars of a real entity [80]. A model drawn for a real system by simulation techniques indicates the approximated behavior of that real system [44]. According to Gilbert and Troitzsch (2005), several reasons why simulation method is more suitable to formalize social science theories rather than mathematics include as following:

1. More implicative and less abstract programming languages in simulation;
2. More easefully, focusing on parallel processes, not organized ones with a well-defined order of actions;
3. Modularity in programs, that is, by major changing one part of program, it is not necessary to change other parts of the program;
4. Easefulness of designing systems comprising heterogeneous agents (e.g. human agents with different perspectives, knowledge, skills etc).

The simulation of problem entity

According to Robinson (2004a), there are a large number of researches that each has presented stages for simulation, therefore, the main difference among them pertains to the naming of the processes and the number of sub-processes they focus on. The starting point of simulation considers to problem entity e.g. the system (real or proposed), idea, situation, policy etc. [80, 72, 68, 73]. In fact, there is a question whose answer is unknown; therefore, this directs researchers to define and observe the target in order to provide the parameters as well as initial conditions for model [30]. Developing conceptual model as next stage, it comprises sub-processes as follows:

1. Develop an understanding of the problem situation;
2. Determine the modeling objectives;
3. Design the conceptual model: inputs, outputs and model content; and
4. Collect and analyze the data required to develop the model [67]. Coding conceptual model, it is converted into computerized models. The next stage would be experimentation, meaning by conducting computer experiments on the computerized model, inferences about the problem entity are obtained [73]. According to Robinson (2004a), the experimentation phase is a process of what-if analysis, which means making changes in model's inputs, running the model, inspecting the results, and learning from the results. Afterwards, solutions learnt from simulation would be implemented on real world system. Verification and validation are important stages of simulation process so that by testing the model, failures are determined to indicate whether the problems are related to the conceptual or constructed model [57, 80]. Unfavorably, this process can be hard to accomplish with intricate simulations [30]. Verification pertains to ensure of the model right [57]. In other words, verification focuses upon ensuring that the model is being correctly run and worked as intended [30, 80]. An important point in model verification is related to accurate transition of a problem formulation into a model specification [4]. Validation attempts to ensure providing right model [57] so that model behavior does in accordance with the target behavior [80, 30]. If the purpose of the modeling is to answer an assortment of questions, the validity should be checked in terms of each question [73].

Some implications for applying simulation rather conventional analytical ones

Emergence is an inherent feature of social simulation [28] as well as the central phenomenon of the social sciences [74]. It shows an inter-level linkage which generates an association between autonomy and dependence [83]. In emergent systems, a small number of rules are used at a local level (among many agents); therefore, agents are capable of generating complexities in the form of aggregate patterns [35]. Indeed, large scale patterns (macro-level) in the world are usually formed by the interactions among large numbers of smaller pieces (micro-level) so-called emergent phenomena [21, 34, 91]. Sun (2006), by exemplifying collective cognition as emergent from individual cognition, believes that collective cognition is nomologically dependent on its emergence base, and yet is ontologically autonomous. It means that individual cognition is necessary for collective cognition to exist.

Complexity is inevitable thing. In fact, societies seemingly have rather unpredictable features, that is, their traits at any one time seem to be influenced by their past histories [27]. In socio-ecological systems, complexities are resulted by either ecological, agro-ecosystem dynamics, the interactions among the stakeholders, and socio- economic environment [32] or by possible internal conflict among social goals emanated from diverse group identities [41]. Such complexities can be analyzed depending on how a researcher concentrates on phenomenon targeted. In fact, social

researchers can see complexity as episode resulted by inter-individuals interactions where different attitudes, beliefs, and preferences are arising. In deeper view, complexity can emerge from interactions of inter-groups. The nature and complexity of social interactions within agro-environmental systems presents the implication of understanding the decision-making process as a complex [17]. So, in farming system, decision about farming practices needs to a careful balance of numerous considerations and trade-offs as regards complex environment [46].

The physical world is distinguished as fully linear or roughly linear, that is, the traits of the whole are a fairly simple aggregation of the components e.g. galaxy, with hundreds of millions of component stars, can be precisely forecasted using the basic equations of motion [27]. In social systems, episodes as a consequence of so much complication are not predicated in the linear way [30]. Particularly, social phenomena have dynamic properties changing when time passes. Unlike static models, dynamic models permit updating the features of the individuals every time step [19]. To analyze social systems, conventional statistical methods are almost all founded on the confined assumption of linearity, that is, variations in dependent variable is proportional to a sum of variations in a set of independent variables [30]. In human societies, the system behavior as a whole cannot be predicted by partitioning it and finding out the behavior of each part discretely [27]. In general, simulation is applied as an effective procedure to explore nonlinear behavior [44, 30].

Related to heterogeneity, farmers, as the main stakeholder in agricultural systems, do not behave through defined repertoire. There is so much diversity in the context they work in. For example, ecological heterogeneity is signaled by progress of different agricultural systems, ranging broadly from fallow systems to permanent cropping systems and from intensive to very extensive livestock production systems [59]. Related to ecological stability, it is a function of not just simplicity and homogeneity but also complexity and variety [93]. Such heterogeneities are forces to simulate ecological patterns and processes [16]. Neither all farmers within any given agricultural region are the same [17]. When developing a model on an aggregate level, it relies on heterogeneity, interaction, process or representation of dynamics [19]. Complexity leads to the need for integrated and interdisciplinary assessment so as to induce seeing the whole as greater than the sum of its parts [82, 35].

An integrated baseline for agent-based simulation in agro-environmental research

Evidently, the definition of terms is an integral part of a scientific assertion. It shows readers how terms have been conceptualized and operationalized. In doing so, system, farm system and farming system has been defined. A system is a set of interacting connected components with a purpose; however, the components may be as systems themselves they interact in fulfilling a common goal [15, 81]. The household, its resources, the resource flows and interactions at individual farm level is called farm system [18]. A collection of individual farm systems with similarity in their resource bases, enterprise patterns, household livelihoods and constraints is defined as farming system (Ibid).

A single model representing only one scale may not be sufficient to simulate all the driving factors, which can operate at different levels [33]. Pavao-Zuckerman (2000) believes that ecosystem is a transcalar notion, that is, ecosystem is defined in terms of input and output environments as well as at any spatial scale. In fact, rural landscapes are characterized by spatial complexity resulted from the dynamic interaction between the spatial distribution of biophysical cues and variable human actions [42]. Multiple environments of human ecosystems can be ordered in a spatially scaled hierarchy so that human ecosystems can be located anywhere from the level of organisms and families up to the level of nations and world systems [58]. In the other hand, depending on looking at the different angles, farming practices are diverse not only at different hierarchical levels and in different domains, but also across different times [46]. Hierarchical levels content the level of individual production objects, the level of aggregate production objects, the level of the farming system, and the farm in its environment (Ibid). Likewise, one can horizontally take into account them; however, they will have different aspects such as technical, social-organizational and economic. To this end, balancing the economic, social and environmental dimensions of agro-ecosystems [90] would become important issue. Given farmers lean on information from past decisions to update their current decision-making [75], the coordination of farming practices overtime (past, present and future) would be noticeable [46]. Darnhofer et al. (2008) put, therefore, these hierarchical levels, domains and times. They elaborate that systems are placed at diverse spatial scales accompanied with different domains of ecological, social, and economic. In addition, these systems interact together across spatial and temporal scales and across domains. Exemplifying global warming to show these interactions, they declare that global warming is in consequence of local economic activities. Additionally, dealing with interactions happened across time scales, they put the dependency of western agriculture from petroleum or a form of inter-temporal subvention. With regard to interactions across domains, they exemplified the effect of agricultural policies on the economic framework. Moreover, the spatial and temporal scales are not necessarily fitted. In other words, there are rapid changes at the world-wide scale (e.g., the rapid grow of the world market price for wheat, rice and milk in 2007/2008) and there are slow changes at the farm-level (e.g., farmers' mental models) as well. Therefore, local farm decisions and activities can result environmental consequences, because humans can give rise to various environmental consequences, which may bilaterally affect future humans' decisions and behavior [1, 76]. Needing to be much greater emphasis on the development, examination and application of more process-oriented or mechanistic models of agricultural systems [92], the incorporation of interactions among economic, environmental and social dimensions of such systems become mandatory, which allows acquire management options for them [76]. In fact, in managing most agricultural systems, decision-making has to synchronously consider more than one criterion [66].

An integrated baseline to farming systems research has been drawn in "Fig. (1)", compounded personal, organizational, national/regional and global levels, different domain and times. Each level can affect behavior [68]. In personal level, farmers are heterogeneous in terms of socio-cultural background, economic situation, representing autonomous decision-makers which make their own decisions in accordance with objective and subjective rules

[87]. Additionally, their behavioral options can be unquestionably influenced by the production organization e.g. private or commercial production organization (e.g. commercial production organization can impose a kind of specific crop to plant). Associated with regional and national institutions, for example, if they advocate laws related to precision agriculture, many farming systems might adapt themselves to this kind of agriculture. Moreover, global policies can affect farmers' options, for example sole increase of crop production to undertake food security on one hand and crop production accompanied with environmental considerations on the other hand can extent or limit farmers' options to use natural resources. Therefore, each level can introduce specific social, economic, ecological, political domains.

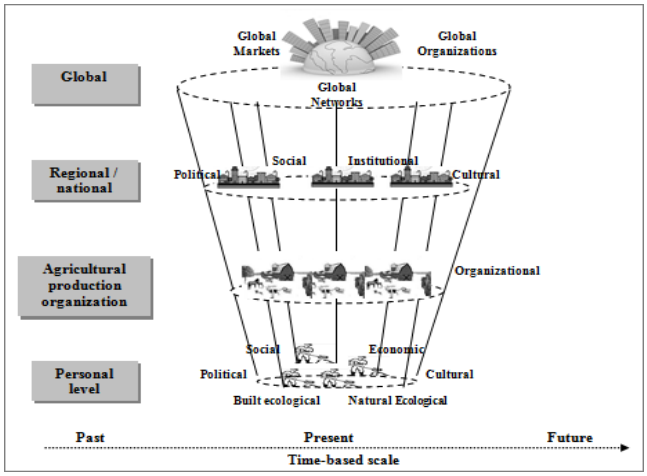

Fig. 1- An integrated baseline to farming social systems research

Looking at the interactions between the social and natural systems, changes in the social system refer to changes in technology, economy, demography (or population), institutions and culture; whereas natural system changes are imputed to those emerged by humans e.g. air and water pollution, global warming, natural resource degradation etc [38]. Given different kinds of changes and different levels which contain factors affecting behavior, some examples can be taken into account. For example, how farmers' intention (in specific thresholds) changes to adopt new agricultural technologies disseminated in local farms overtime; how farmers' attitude toward agricultural energy resources (e.g. water, fertilizers, chemicals, fossil fuels, electricity etc) is differentiated (e.g. altruism, exploitive, etc) over time; how conflicts emerge between different stakeholders over access to natural resources and how local energy resources become unsustainable by interactions of farmers with different decision-making strategies over time?

Agent-Based Modeling (ABM)

To reproduce processes in agro-environmental systems, agent-based modeling (ABM) is an appropriate approach. Applied in economics, political science, sociology etc [26], it enables researchers to understand the dynamic behavior of complex systems [53]. It also permits flexible design of how individual entities behave and interact; therefore, it may be the only way to go forward certain research questions [64]. The tenets of agent and agency have taken a main role in defining research in social and behavioral sciences [83]. Widely, an agent is defined as a self-contained software element that takes action autonomously on behalf of a user (e.g., person or organization etc); therefore, each agent has its own sequence of actions and interactions performed over a time [61, 80]. Agents can range from active data-gathering decision-makers with complicated learning abilities to passive world traits with no cognitive functioning [85]. Drigo (2010) has presented the information about traits of agents such as autonomous, self-directed, modular, self-contained, heterogeneous, learner-adapter, social and interacting, goals-possessor to stimulate the behavior, engaged in local interactions, bounded-rationality-oriented (i.e. making decisions on the basis of the local and incomplete information) and emergent-bases behavior. These units of analysis are autonomous entities that can perceive, decide, and act on its own, in accordance with its own interest, but may also cooperate with others to achieve common goals [83, 36]. The virtual worlds in which units of analysis or agents can interact together is called the environment, involving both as entirely neutral context with little or no influence on agents and as carefully manufactured as the agents themselves [26]. In agent-based simulation, models are often qualified by several parameters with nonlinear interactions which together to determine the large-scale system dynamics [53]. Gilbert and Terna (1999) have presented overall scheme of agent-based modeling, as shown in "Fig. (2)".

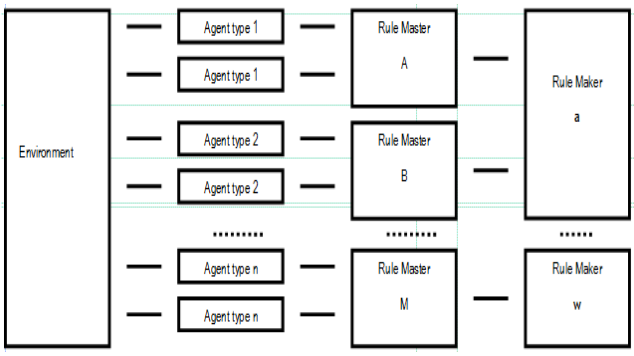

Fig. 2- The Environment-Rules-Agents framework to build agent based computational models (Gilbert and Terna, 1999)

Additionally, they pointed out two advantages related to their agent-based scheme as follows:

a. The Environment-Rule-Agent (ERA) contains the environment, which models the context by means of rules and general data, along with the agents, with their private data, at different conceptual levels. For being simplified the code design, agent behavior is determined by external objects, named Rule Masters, which can be interpreted as abstract representations of the cognition of the agent.
b. A second advantage of the use of ERA structure is its modularity, which allows modelers to modify only the Rule Master and Rule Maker modules or objects whenever one wants to switch from agents based on a classifier system, to alternatives such as neural networks, production systems or genetic algorithms.

As before declared, ABM is assumed to be an appropriate simulation approach to address points necessary to be considered in our baseline during simulation of processes of agro-environmental systems, because it can simulate horizontal relationships (spatial configurations) and vertical relationships (socio-economic organi-

zation) in the integrated framework [49]. This approach can concentrate on two levels namely micro-level (attitude, personality type, and decision-making) and macro-level (social influence, norm formation, social or cultural transmission of concepts [65, 38]. In fact, social and psychological phenomena e.g. attitude polarization in group discussion, intergroup conflicts and so on happen not just as the result of explicit choices by isolated individuals, but also as the result of repeated interactions between multiple individuals over time [79]. In this direction, to explain consumer behavior, Jager (2000) declared that the micro-level factors are those that often are different between persons such as their needs, values, behavioral opportunities etc; whereas, macro-level driving factors, roughly being equal for all people, deal with the natural and human environment, largely determining the people's behavioral options.

Different agents can be representative of diverse levels presented in the baseline. For example, agents like agricultural extension agents can be representative of regional and national level. Occasionally, these agents, as governmental or non-governmental social workers, disseminate technologies less having environmental-based properties (green-revolution-based). Due to this, one may explore how interactions among farmers themselves on the one hand and agricultural extension agent altogether affect nature degradation over time. Valbuena (2010) has shown that how the responsive decisions of farmers to changes in socio-economic processes at national and global levels (i.e. integrated scenarios) can affect the landscape structure in a rural region in Netherlands. In this direction, agents can be used to represent entities at different levels, either lower level such as neural networks or higher such as social groups, organizations, and economic actors [65]. Moreover, agents can be composed of other agents, thus permitting hierarchical constructions e.g. a firm might be composed of workers and managers [85]. As Jager (2000) stated, social environment entailing technological, demographical, cultural, economic changes together with natural environment as large-scale level can affect micro-level containing intrapersonal characteristics such as needs, abilities, attitudes, learning styles etc. For example, regarding land use and land system, the Earth's lands are coupled socio-ecological (or human-environmental) systems in which both socioeconomic and natural factors interact in shaping patterns and dynamics [25, 16]. The linkage between micro and macro level has been indicated in "Fig. (3)".

In this model, in order to formalize interactions between agents, different behavioral theories can be applied. In fact, behavioral theories by presenting important insights can guide the development of agent rules to simulate human–environment interactions [37, 38]. According to Smith and Conrey (2007), the first step related to design an ABM is to clarify the relevant entities depending on the theory. Different theories present different constructs, for example intra individual-constructs. In order to develop agent-base models, some constructs among agent would be fixed, only value of them would be changed [70], although entering all variables and parameters in model may be opposed to simplicity principle in modeling and simulation. Hence researchers have suggested placing more emphasis on understanding and improving the system of interest rather than fully controlling the system or seeking the orderly and predictable relationship between cause and effect [1].

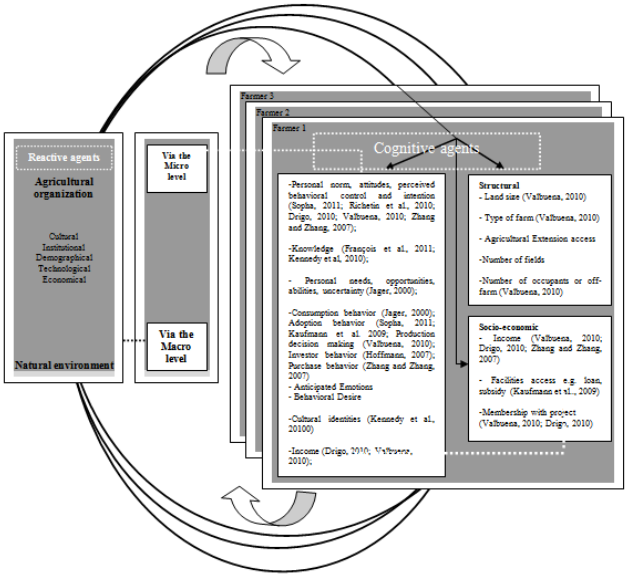

Fig. 3- Overall schematic linkage of Micro and Macro adapted from Jager (2000)

In fact, in explicit models, opposed to implicit models, one can sweep a huge range of parameters over a vast range of possible scenarios to identify the most prominent uncertainties and important thresholds [20]. The point which should be concentrated is that an agent-based model focuses on bottom-up (from of the agent's local perspective); therefore, the dynamics and patterns observed at a global level are due to interacting autonomous local entities (agents) that can perceive and modify their environment, communicate among themselves, and refer to specific goals and representations to make their decisions [94]. It is, however, said that the system parameters at the local level of the agent rules of behavior must be harmonized to achieve some global objectives [53]. In this way, in order to assess reciprocal relationships between socioeconomic and ecological components of the system, it is necessary to take into account both local scale and higher-level effects [25].

Empirical research have used (or related) ABM in the context of agro-environmental systems

There are enough articles to refer them, those whose methodology share with ABM in background of agriculture [63, 54, 71, 39, 31, 49], land use [88, 3, 25, 89, 2, 75], fishery management [94], forestry management [78, 9, 8, 21]; rural development [70], although each followed different goal. A main part of some researches are allocated to explore interactions between farmers or local people with their environment. It indicates the significant role of their decisions in changing their environment. This set contains the lately researches have used (or related to) ABM in agriculture or natural resource management. Our emphasis would more be on methodology and model development procedure these researches have followed rather than the results acquired.

In order to examine the influence of farmers on dispersion of the kind of potato pest called T. solanivora in agricultural landscape of the tropical Andes, Ecuador, Rebaudo et al. (2011) modeled the pest spatial-temporal dynamics (responses to climate with regard to survival, dispersal and reproduction) through cellular automata

and pest dispersion induced by farmers through ABM as well. Their model included agricultural landscape properties; the insect pest population and the groups of farmers. Moving agents around on a grid of cells in a single timeframe, whose level of pest infestation can be altered as "infested" or "non-infested", depending on farmers' pest control knowledge and the pest infestation in a given cell. On the whole, they conclude that pest spread is as a consequence of collective decisions of farmers and ABM provides an opportunity to introduce farmers with social and psychological issues in pest management programs. Integrating local and academic knowledge, Naivinit et al. (2010) used a discrete time-step and spatially explicit agent-based model namely BanMakMai (BMM), developed in COR-MAS. This model follows ODD (Common-pool Resources Multi-Agent Systems) protocol as a criterion. It contains entities such as individual (age, gender, marital status and migration experience), household (average farm input cost, average annual net household income and annual area of paddy for self-consumption), village (daily wages pertain transplanting and harvesting), rice (two groups of varieties: early and late-maturing), and water tank. Furthermore, they used a UML (Unified Modeling Language) class diagram (class, attribute and behavior) to show the structure of the ABM as well as UML sequence diagram to demonstrate the outline of process and scheduling. Generally speaking, their model is confirmed as an efficient tool to elucidate interrelations between labor migrations and rice production system as well as being acclaimed that BMM model can be a communication tool used in villages to co-design conceptual model. Combining ABM and anthropological approach, Saqalli et al. (2010b) used a fieldwork to make behavioral rules of individuals in non-pastoralist villages of Nigerian Sehel using explication of research conducted on the three survey situations. An individual-centered model, called SimSahel, represents a biophysical environment modeled by a grid of cellular automata with objects as livestock and agents as villagers (gender, rank, lineage and individual and family wealth). The main research finding showed that villages specialize themselves into different economic activities according to natural resource specificities. To apprehend Latvian and Estonian farmers' organic agriculture adoption behaviors and changeability of their behavior over time, Kaufmann et al. (2009) implemented ABM that was grounded both Theory of Planned Behavior (TPB) as framework for understanding and modeling farmers' decision-making processes and some economic components. They settled an intention-based rule, that is, if an agent's intention transcends a threshold, then it is grouped as an adopter of organic agriculture; otherwise non adopter. In addition, a level of uncertainty towards farmers' attitude and subjective norms was determined. Associated with social influence (to some extent an agent is influenced by other agent), these researches enabled the receiver agents to update whose subjective norm in accordance with the sender's overall opinion. The most important result acquired is that combined adoption rate is higher than the sum of the proportion of adopters resulting from just social influence (without a subsidy) and from just a subsidy (without social influence). In order to find out the relationship between structural change in agriculture and a policy regime, Happe et al. (2008) performed complex model of spatial agent-based model called AgriPoliS and farm-N. The latter assumes that the agricultural system is a complex adaptive system incorporated individual farms so that can make decisions to change regional structure. At each time step, each farm agent decides related to production and investment, assuming to optimize labor, production and investment decisions with regard to their resources such as capital, land, family labor. The former indexes N annual flows of individual farm along with helping evaluate how farm structure and management influence on losses N the environment receives. Entering inputs, this model approximates the imports and exports of N to the farm. The results indicated that there is intricate interaction between structural changes, losses of nitrogen, and environmental regulation.

Mathevet et al. (2003) used GEMACE as a multi-agent model in COR-MAS in order to simulate farming-hunting-duck interactions in the Camargue, placed in south of France. Initially, they determined three entities of "Cell" as the elementary spatial unit, "farmer/landowner" and "hunting" as two social entities. After specifying the attributes and behavior of each entity, the second stage of modeling was to determine the dynamics of the interactions between entities by coordinate the interactions between spatial entities and agents as regards their order. GEMACE contains components such as the virtual landscape, the natural flooding process, duck resource dynamics and society. The main result acquired was that land-use changes, wetland management, hunting harvest, and disturbance are factors that affect the duck population.

In order of simulating the diffusion of greenhouse agricultural innovations in a watershed in the northern uplands of Thailand, Schreinemachers et al. (2009) developed a model combining an econometrically estimated adoption function with ABM. They used MP-MAS (Mathematical programming-based multi-agent systems), belonging to category of ABM/LUCC (Agent-based models of land use and land cover change) where they combined cellular component representing a landscape with an agent-based component as human decision-making. The assumption MP-MAS pursue is that agents behave largely rational in their economic decision-making about production and consumption, although this is criticized by ABM. It uses decision-trees and condition-action rules instead. To show how agent's information can be combined into empirical, biophysical land use models, Bakker and Doorn (2009) performed cluster analysis and categorized farmers into four groups of active, innovative, absentee and old on the basis of data related to age, education, property size, the number of animals possessed and the average distance between the landowner's residence and his or her property. Furthermore, according to data related to 1985 and 2000, they distinguished four types of lands: arable crops, forest, arable crops or grass with trees, and shrubs. Overlapping the 1985 land cover map with the 2000 land cover map, they built land use change map, ultimately three concepts of afforestation of arable land; abandonment of arable land and restoration of the traditional Montado system were used in accordance with land use transitions had happed. The main result indicated that each farmer type uses different criteria for selecting land for a certain land use change.

Combining agent-based and stock-flow modeling approaches in a participatory approach, Gaube et al. (2009) developed SERD (Simulation of Ecological Compatibility of Regional Development) including three main modules: an ABM module simulating decisions of actors (e.g. farmsteads, the municipal administration etc);

a spatially explicit land-use module simulating land-use change as well as an integrated socio-ecological stock-flow module simulating carbon and nitrogen flows via socio, economic and ecological components of the system. They found out that both external (e.g. agricultural subsidies and prices) and internal factors (e.g. innovation, willingness to co-operate) can influence on the behavior of the integrated system noticeably.

To formalize the interactions between the biophysics dynamics of the natural resources and the socio-economic factors driving the land-use dynamics around the drilling of Thieul village in the sylvo -pastoral area of Ferlo, Senegal, Bah et al. (2006) designed agent -based model based on a participative approach, comprising three stages of 1) external specifying of the situation by survey with a number of the various stakeholders as decision-maker in pastoral unit; 2) strengthening of endogenous skills through workshop, which enables stakeholders to detail their development plans; 3) designing map by actors as well as elaborating the activities of the main stakeholders in accordance with the annual agro-pastoral calendar. After developing conceptual model based on information acquired through three stages in the format of UML, this model was run on computer. Of the main results acquired in this research was that steady rainfall over long periods of time can result negative effects on the relations between herders and farmers. To analyze amount of observable footprint on an agricultural landscape by farmers' imitation in Dyle river watershed, central Belgium, Schmit and Rounsevell (2006) used parcel data, which adjacent entity of unique agricultural land use; farm location data, which was gathered through geo-coded as points; and neighboring parcels contenting specific shape files representing their actual shape and geo-referenced position. The results acquired the validity of the assumptions under the surface of agent-based models trying to account for agricultural land use through imitation behavior.

A model namely ComMod (The companion modeling) was applied by Simon and Etienne (2010). This model was relied on the co-construction (use of different stakeholders' view points), which was integrated with ABM to represent the current management of farms as well as providing alternative forest management scenarios. Using COR-MAS platform, the environment was provided to represent of the SCTL (Societe Civile des Terres du Larzac land) land, GIS-based data providing a set of ecological (land use types), agronomic (forage patches) and management entities (farms, paddocks, forest plots). To develop conceptual model ARDI (Actors, Resources, Dynamics and Interactions) approach was used, providing specific framework to describe an ABM embedded in natural resources management. While developing conceptual model, the modeler may need to address questions pertaining to the resources, the ecological dynamics, and the interactions between the three previous elements. They concluded that participants became aware of how spatial and temporal scales of management overlap and they progressively worked out a compromise between livestock breeding concerns of farmers and forest dynamics concerns of SCTL managers. Coupling three model of agent-based of subsistence farming; individual-based model of forest dynamics; and spatially explicit hydrological model, Bithell and Brasington (2009) aimed at bringing together three aspects of land-use change such as hydrology, ecology and people to respond how demographic changes influence deforestation and evaluate its impact on forest ecology, stream hydrology and changes in water availability. The model was parameterized by landscape characteristics, hydrology, forest and households. Evans and Kelley (2008) applied model in order to analyze forest regrowth process in south-central Indiana from 1939 to 1993. Four modules were used to develop model: (1) agent decision-making dynamics; (2) household demographics; (3) land use changes and biophysical processes, and (4) crop price, timber price, and wage labor rate tracking. In order to achieve model calibration, two variables were used on the basis of baseline scenario: 1) 5 years as age of forest regrowth and 2) neither did landowners receive no economic value from forest harvesting of less than 30 years of regrowth. Due to lack of comprehensive way to validate the model assumptions, researchers were convinced that the simulation was not a better way to understand reality rather than other ones.

Run agent-based model in the COR-MAS platform, Saqalli et al. (2011a) aimed to examine the impact of two development interventions on the village population. To model the rationale of farmers' decision making, they used to approaches named ''gains or losses in economic value'' or ''gains and 'losses in within-village reputation''. Their findings indicated that village populations do not respond en masse to development interventions and reputation has little effect on the population behaviour and should be considered more as a local advocate for wealth amongst villagers, suggesting the monetization of these societies. To determine effective policies for ecological agriculture development in Slovenia, Rozman et al. (2011) developed simulation model using SD (System dynamics) methodology containing variables which affect the development of organic agriculture such as number of conventional and organic farms, conversion, subsidies, promotion of organic farming, organization of general organic farming support environment, system self awareness, delay constants of process changes. To construct causal loop diagram, they considered three variables 1) the number of potential farms for conversion to organic farming 2) the number of farms converted to organic farming and 3) conversion rate. Related to ABM, two agents used representing conventional farms and organic farms.

Conclusion

As has been declared, the implications such as emergent phenomena, complexities, heterogeneities and nonlinear processes in agro-environmental systems inform prominent and subtle considerations, pushing researchers to pursue research methodologies going beyond conventional statistical methods. In this contribution, an integrated baseline to analyze agro-environmental systems was presented which is grounded on three important issues: different hierarchical levels, different domains (social, economic, ecological etc) and different times. As a result, agent-base modeling (ABM) was introduced as the best methodology with regard to lately researches performed in this precinct. Such researches showed that agent-based modeling is capable of examining and simulating horizontal relationships (spatial configurations) and vertical relationships (socio-economic organization) in the integrated framework. Such integrated baseline can help researchers to draw conceptual model and take account specific considerations in agro-environmental systems researches. In summary, this article aimed to present this fact that farmers' activities in local

area can affect their environment (e.g. give rise environmental crisis) and can be affected by other level related to agro-environmental systems. When applying agent-based model to explore interactions from button to up, this importance must be considered. So, researchers wanting to analyze agro-environmental systems have to notice not only natural environment but also human environment, especially this importance is prominent in agriculture.

Acknowledgements
Corresponding author acknowledges Prof. Dr. Marina Fischer-Kowalski the dean of Institute of Social Ecology affiliated to University of Alpen-Adria in Austria due to provide opportunity to the use library resources during his stay to spend fellowship period.

References

[1] An L. (2011) *Ecological Modelling* (in press).
[2] Bah A., Toure I., Le Page C., Ickowicz A. and Diop A.T. (2006) *Mathematical and Computer Modelling*, 44 (5-6), 513-534.
[3] Bakker M.M. and Doorn A.M. (2009) *Land Use Policy*, 26 (3), 809-817.
[4] Balci O. (1997) *The 29th on Winter Simulation Conference. IEEE Computer Society Washington, USA*. 135-141.
[5] BenDor T., Scheffran J. and Hannon B. (2009) *Ecological Economics* , 68 (4), 1061-1073.
[6] Le Bars M., Attonaty J.M. and Pinson S. (2002) *The First International Joint Conference on Autonomous Agents and Multiagent Systems, New York*.
[7] Bates D.G. and Tucker J. (2010) *Human Ecology: Contemporary Research and Practice*, First Edition, Springer, New York.
[8] Bithell M. and Brasington J. (2009) *Environmental Modelling & Software*, 24 (2), 173-190.
[9] Bone C. and Dragicevic S. (2010) *Environment and Urban Systems*, 34 (2), 162-174.
[10] Cowan C.W., Watson P.J. and Benco N.L. (2006) *The Origins of Agriculture: An International Perspective*, University of Alabama Press, Tuscaloosa.
[11] Cudeck R. and MacCallum R.C. (2007) *Factor Analysis at 100: Historical Developments and Future Directions*, Lawrence Erlbaum Associates, Newgersy.
[12] Cullingworth N. (2004) *Edexcel BTEC National Public Service*, Nelson Thornes, London.
[13] Cunfer G. (2005) *On the Great Plains: Agriculture and Environment*, First Edition, Texas A&M University Press.
[14] Darnhofer I., Moller H. and Fairweather J. (2008) *Farm resilience for sustainable food production: A conceptual framework*.
[15] De Kock E. (2003) *MS. Thesis*, University of Pretoria. 165.
[16] Deffontaines J.P. Thenail C. and Baudry J. (1995) *Landscape and Urban Planning*, 31 (1-3), 3-10.
[17] Dent J.B., Edvard-Jonse G. and McGregor M.J. (1995) *Agricultural Systems*, 49 (4), 337-351.
[18] Dixon J.A., Gulliver A. and Gibbon. D. (2001) *Farming systems and poverty: Improving farmers' livelihoods in a changing world*, FAO & World Bank, Rome, Italy.
[19] Drigo M.V. (2010) *MS. Thesis*, University of Illinois at Urbana-Champaign. 162.
[20] Epstein J.M. (2008). *Journal of Artificial Societies and Social Simulation*, 11, 4.
[21] Evans T.P. and Kelley H. (2008) *Geoforum*, 39 (2), 819-832.
[22] Fischer-Kowalski M. (2011) *Environmental Innovation and Societal Transitions*, 1 (1), 152-159.
[23] Fischer-Kowalski M. and Rotmans J. (2009) *Ecology and Society*, 14 (2).
[24] Fischer-Kowalski M. and Weisz H. (1999) *Advances in Human Ecology*, 8, 215-251.
[25] Gaube V., Kaiser C., Wildenberg M., Adensam H., Fleissner P., Kobler J., Lutz J., Schaumberger A., Schaumberger J., Smetschka B., Wolf A., Richter A. and Helmut Haberl. (2009) *Landscape Ecology* 24 (9), 1149-1165.
[26] Gilbert N. (2008) *Agent-Based Models*, Sage Publications, London.
[27] Gilbert N. (2004) *Agent-based social simulation*: dealing with complexity.
[28] Gilbert N. (2002) *Varieties of emergence*.
[29] Gilbert N. and Terna P. (1999) *How to build and use agent-based models in social science*.
[30] Gilbert N. and Troitzsch K.G. (2005) *Simulation for Social Scientists*, Second Edition. Open University Press, London.
[31] Happe K., Balmann A., Kellermann K. and Sahrbacher C. (2008) *Journal of Economic Behavior & Organization*, 67 (2), 431-444.
[32] Hawkins R. (2009) *Collective Innovation: a resource book*.
[33] Henseler M., Wirsig A., Herrmann S., Krimly T. and Dabbert S. (2009) *Agricultural Systems*, 100 (1-3), 31-42.
[34] Hoffmann A.O.I. (2007) *Ph.D. Thesis*, University of Groningen. 162.
[35] Hu Z. (2004) *Ph.D. Thesis*, University of Georgia. 236 pp.
[36] Ipekci A.I. (2002) *MS. Thesis*, Naval postgraduate school Monterey, California. 178.
[37] Jager W. and Mosler H.J. (2007) *Journal of Social Issues*, 63 (1), 97-116.
[38] Jager W. (2000) *Ph.D. Thesis*, University of Groningen (NL), 240.
[39] Kaufmann P., Stagl S. and Franks D.W. (2009) *Ecological Economics*, 68 (10), 2580-2593.
[40] Kennedy W.G., Hailegiorgis A.B., Rouleau M., Bassett J.K., Coletti M., Balan G.C. and Gulden T. (2010) *The 19th Conference on Behavior Representation in Modeling and Simulation, Charleston*.
[41] Krantz D.H., Peterson N., Arora P., Milch K. and Orlove B. (2008) *Decision Modeling and Behavior in Complex and Uncertain Environments*, 165-198.
[42] Laterra P., Orúe M.E. and Booman G.C. (2011) *Spatial complexity and ecosystem services in rural landscapes Pedro*.
[43] Lawrence R.J. (2003) *Landscape and Urban Planning*, 65 (1-2), 1-10.
[44] Lee T.R. and Kao J.S. (2001) *Agricultural Systems*, 67 (2), 71-82.
[45] Li Z. and Haichun L. (2010) *Seeds and Synergies Innovation in Rural Development in China*. IDRC, pp. 85-111.
[46] Leeuwis C. and Van den Ban A. (2004) *Communication for Rural Innovation: Rethinking Agricultural Extension*, Third Edition. John Wiley & Sons, Wageningen.
[47] McCarthy D. and King L. (2009) *Environmental Sociology: From Analysis to Action*., 1-22.

[48]Marten G.G. (2001) *Human Ecology: Basic Concepts for Sustainable Development*. Earthscan, London.
[49]Mathevet R. Bousquet F., Page C.L. and Antona M. (2003) *Ecological Modelling*, 165 (2-3), 107-126.
[50]Moffatt S. and Kohler N. (2008) *Building Research & Information*, 36 (3), 248-268.
[51]Moran E.F. (2005) *Seeing the Forest and the Trees: Human-Environment Interactions in Forest*. MIT Press, Massachusetts.
[52]Morris M.L., Binswanger-Mikhize H.P. and Byerlee D. (2009) *Awakening Africa's sleeping giant: prospects for commercial agriculture in the Guinea Savannah zone and beyond*. World Bank Publications.
[53]Narzisi G., Mysore V., and Mishra B.B. (2006) *The IASTED International Conference on Computational Intelligence*.
[54]Naivinit W., LePage C., Trébuil G. and Gajaseni N. (2010) *Environmental Modelling & Software*, 25 (11), 1345-1358.
[55]OECD (Organisation for Economic Co-operation and Development), (1999) *Environmental indicators for agriculture: Concepts and framework*, OECD Publishing.
[56]Palmer J.A. (1998) *Environmental Education in the 21st Century: Theory, practice*, Progress and Promise. Routledge, London and New York.
[57]Parnell G.S., Driscoll P.J. and Henderson D.L. (2010) *Decision making in systems engineering and management*, Second Edition, John Wiley & Sons, Inc., Hoboken, New Jersey.
[58]Pavao-Zuckerman M.A. (2000) *Journal of Ecological Anthropology*, 4, 31-56.
[59]Posthumus H. (2005) *Ph.D. Thsis*, Wageningen University and Research Centre. 216.
[60]Perry G.L.W. and Millington J.D.A. (2008) *Perspectives in Plant Ecology, Evolution and Systematics*, 9 (3-4), 191-210.
[61]Raibulet C. and Demartini C. (2000) *Computer Networks*, 34 (6), 823-830.
[62]Raman S. (2006) *Agricultural Sustainability: Principles, Processes, and Prospects*. Food Products Press, Binghamton.
[63]Rebaudo F., Crespo-Pérez V., Silvain J.F. and Dangles O. (2011) *Journal of Artificial Societies and Social Simulation* 14 (3).
[64]Richiardi M., Leombruni R., Saam N.J. and Sonnessa M. (2006) *Journal of Artificial Societies and Social Simulation* 9 (1).
[65]Richetin J., Sengupta A., Perugini M., Adjali I., Hurling R., Spence M., and Greetham D. (2010) *Cognitive Systems Research*,11 (2), 181-193.
[66]Ritchie J.T. (1995) *Agricultural systems* 49 (4), 329-335.
[67]Rozman C., Škraba A., Pažek K., Kljajić M., Bavec M. and Bavec F. (2011) *Determination of effective policies for ecological agriculture development with system dynamics and agent based models, Efficient Decision Support Systems: Practice and Challenges from Current to Future*. 355-372.
[68]Saqalli M., Gérard B., Bielders C.L. and Defourny P. (2011) *Agricultural Systems*, 104 (4), 354-364.
[69]Saqalli M., Gérard B., Bielders C.L. and Defourny P. (2010) *Ecological Modelling*, 221 (22), 2714-2727.
[70]Sargent R.G. (2008) *The 2008 Winter Simulation Conference*, 166-183.
[71]Sargent R.G. (2000) *The 32nd conference on Winter simulation. Society for Computer Simulation International. San Diego, CA, USA*.
[72]Sawyer R.K. (2009) *Social and Cultural Interactions*, IGI Publishing, Hershey, pp. 243-260.
[73]Schmit C. and Rounsevell M.D.A. (2006) *Agriculture, Ecosystems and Environment*, 115 (1-4), 113-127.
[74]Schreinemachers P. and Berger T. (2011) *Environmental Modelling & Software*, 26 (7), 845-859.
[75]Schreinemachers P., Berger T., Sirijinda A., and Praneetvatakul S. (2009) *International Association of Agricultural Economists*, Beijing, China, 16-22.
[76]Simon C., and Etienne M. (2010) *Environmental Modeling & Software*, 25 (11), 1371-1384.
[77]Smith E.R. and Conrey F.R. (2007) *Personality and Social Psychology Review*, 11 (1), 87-104.
[78]Sokolowski J.A. and Banks C.M. (2009) *Modeling and simulation for analyzing global events*. John Wiley & Sons, Inc., Hoboken, NJ, USA.
[79]Staffenova J. (2010) *Journal of Information, Control and Management Systems*, 8 (1), 93-100.
[80]Sulser T.B., Duryea M.L., Frolich L.M., Guevara-and Cuaspud E. (2001) *Agricultural Systems*, 68 (2), 113-135.
[81]Sun R. (2006) *Cognition and Multi-Agent Interaction*. Rensselaer Polytechnic Institute, New York.
[82]Taylor J.B. (2006) *Economics*. Cengage Learning Publications.
[83]Tesfatsion L. (2006) *Agent-based computational economics: A constructive approach to economic theory*. Handbook of Computational Economics. Elsevier, Amsterdam, 831-880.
[84]Tien H.N. and Uibrig H. (2006) *Conference on International Agricultural Research for Development*.
[85]Valbuena D. (2010) *Ph.D. Thesis*, Wageningen University, 136.
[86]Valbuena D. Verburg P.H., Veldkamp A., Bregt A.K., and Ligtenberg A. (2010) *Landscape and Urban Planning*, 97 (2), 98-110.
[87]Valbuena D., Verburg P.H., Bregt A.K., and Ligtenberg A., (2009) *Landscape Ecology*, 25 (2), 185-199.
[88]Wei Y., Davidson B., Chen D., and White R. (2009) *Ecosystems and Environment* , 131 (3-4), 263-273.
[89]Wilensky U. (2001) *Modeling nature's emergent patterns with multiagent languages*.
[90]White D.H., Howden S.M. and Nix H.A. (1996) *Ecological Modelling*, 86 (2-3), 213-217.
[91]Wilson G.A., (2007) *Multifunctional agriculture: A transition theory perspective*. Cromwell Press, Trowbridge. London
[92]Worrapimphong K., Gajaseni N., LePage C. and Bousquet F. (2010) *Environmental Modelling & Software*, 25 (11), 1334-1344.
[93]Zhang T., Zhang D. (2007) *Journal of Business Research*, 60, 912-922.